PART NAME	NEMA 4X PLASTIC BOX w/EXTERNAL MTG. BRKT.	PART No.	PN-1323-MB PN-1323-CMB PN-1323-DGMB	REVISION DATE	5-15-17

MATERIAL & FINISH:
(-MB SUFFIX PART NO.) POLYCARBONATE UL94-HB, UV STABILIZED, SERVICE TEMPERATURE RANGE: -40˚C TO +120˚C, LIGHT GRAY BODY & COVER.
(-CMB SUFFIX PART NO.) SAME AS -MB EXCEPT CLEAR COVER.
(-DGMB SUFFIX PART NO.) ABS UL94-HB, SERVICE TEMPERATURE RANGE: -40˚C TO +80˚C, DARK GRAY BODY & COVER.

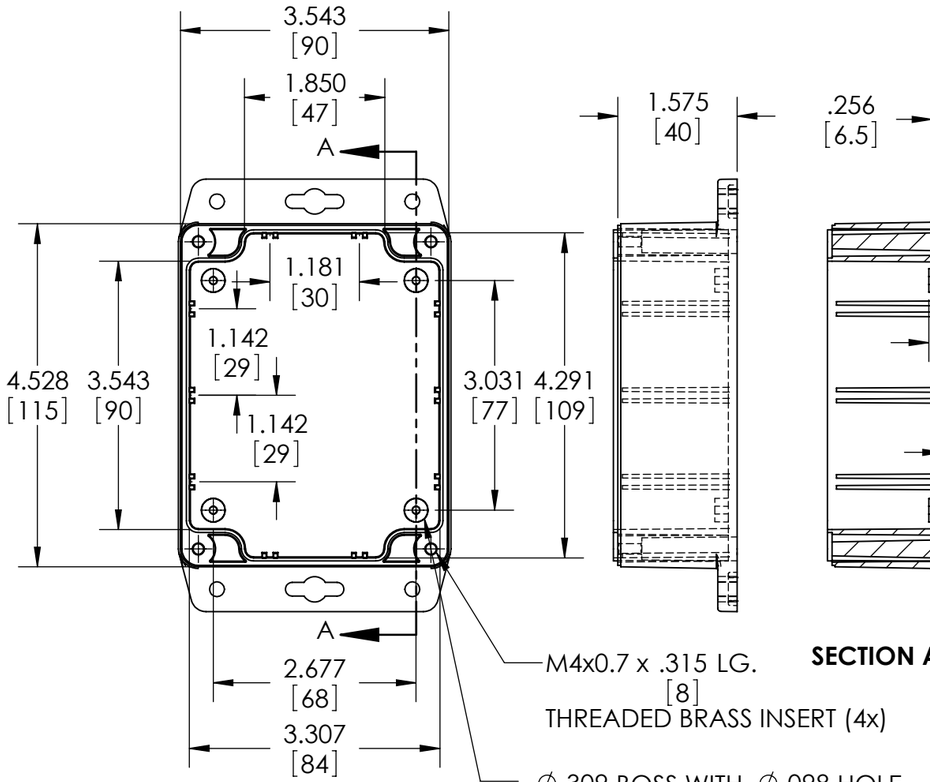

BODY

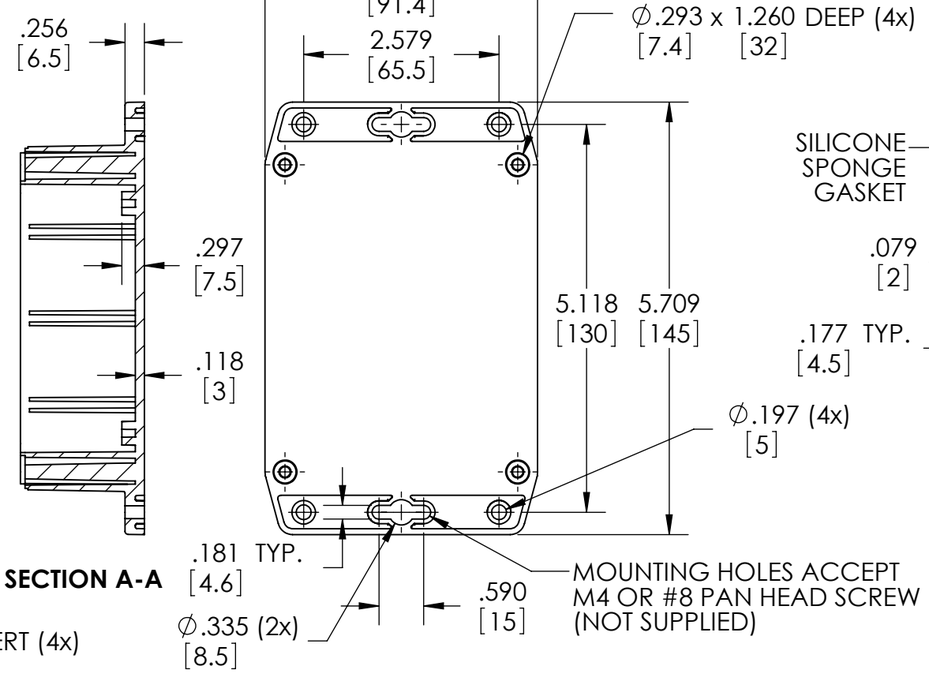

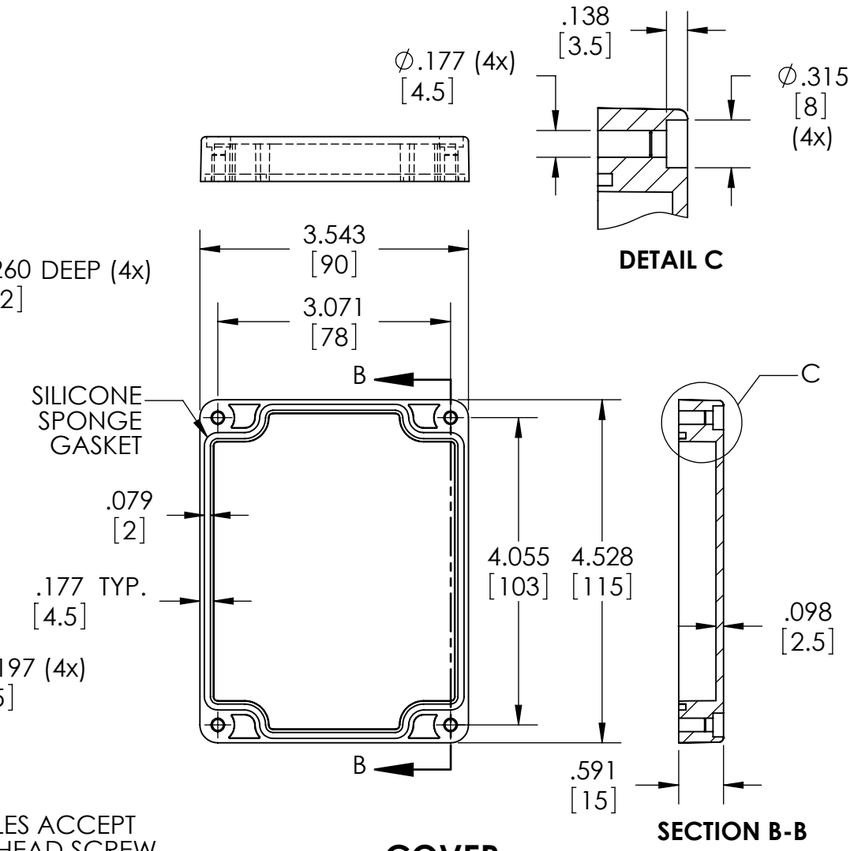

COVER

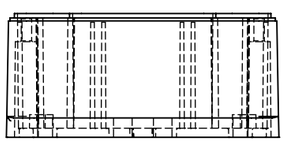

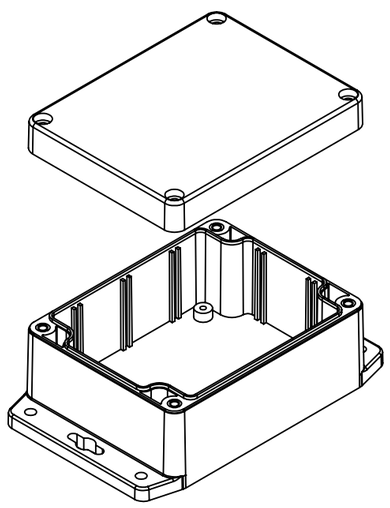

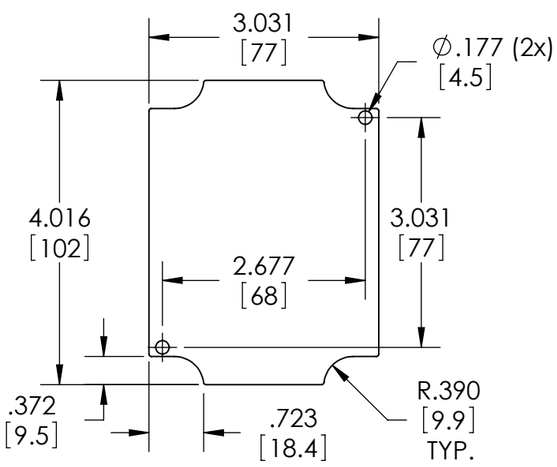

SUGGESTED PC BOARD LAYOUT

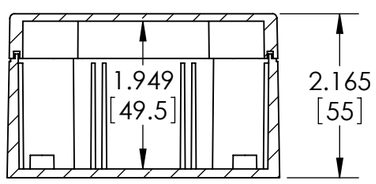

NOTES:
1.) FOUR (4) M4x0.7 x 20mm (.787") LG. STAINLESS STEEL SCREWS SUPPLIED FOR ASSEMBLY OF COVER TO BODY.
2.) BOXES DESIGNED TO MEET FOLLOWING STANDARDS: NEMA 1, 2, 4, 4X, 12, 13 AND IEC529-IP65 REQUIREMENTS.
3.) ALL HOLE DIAMETERS HAVE ±.005[.12] TOLERANCE. ALL OTHER DIMENSIONS HAVE ±.015[.38] TOLERANCE.
4.) ALL OUTSIDE DRAFT ANGLE: 1˚ ALL INSIDE DRAFT ANGLE: 1/2˚